LAPLACE [1-32.]

~ transformacija ~

1. Def Laplaceovog transf: $\int_0^\infty e^{-st} f(t)\,dt$ (A)

2. Osnovni tm o konvergenciji Laplaceovog int: e^{t^2}

$$\int_0^\infty e^{-st}\cdot e^{t^2} = \int_0^\infty e^{-t(s-t)}\,dt = \frac{-1}{s-t}\,e^{-t(s-t)}$$

$s-t>0$

$s>t$ veći (A)

3. Prema TM o konvergenciji: $\int_0^\infty e^{-st}\cdot\cos\left(\frac{1}{13}t\right)dt$

$$\frac{1}{2}\int_0^\infty e^{-st}\cdot\left(e^{\frac{1}{13}t}+e^{-\frac{1}{13}t}\right)dt = \frac{1}{2}\int_0^\infty e^{-t(s-\frac{1}{13})}+e^{-t(s+\frac{1}{13})}\,dt$$

$$= \frac{1}{2}\left[\frac{-1}{s-1/13}\,e^{-t(s-\frac{1}{13})} - \frac{1}{s+\frac{1}{13}}\,e^{-t(s+\frac{1}{13})}\right]$$

$s>0$ konvergira (A)

4. TM o konvergenciji Laplaceovog int., integral: $f(t)=e^{-2t^2}$

$$\int_0^\infty e^{-t(s-2t)} = \frac{-1}{s-2t}\,e^{-t(s-2t)}$$

$s>0$ konvergira

$s<0$ ne konvergira (D)

5. Za funkciju $f(x)=x^8$ → eksponencijalne, eksponent $\sqrt[\text{rasta}]{=\emptyset}$ (D)

6., **7.**, **8.** –//–

9. $\int_0^\infty e^{-st}\cdot\frac{5t^2}{3}\,dt$, $n\in\mathbb{N}$ konvergira za:

$$\frac{5}{3}\int_0^\infty e^{-st}t^2\,dt = \frac{5}{3}\left[\frac{t^2}{-s}e^{-st}\Big|_0^\infty + \frac{1}{s}\int_0^\infty 2te^{-st}\right]$$

$$= \frac{5}{3}\left[\frac{t^2}{-s}e^{-st}\Big|_0^\infty - \frac{2}{s}\left(\frac{t}{-s}e^{-st}\Big|_0^\infty + \frac{1}{s}\int_0^\infty e^{-st}\,dt\right)\right]$$

konvergira za $s>0$ (C)

$$= \frac{5}{3}\left[\emptyset-\emptyset-\frac{2}{s}\left(\emptyset-\emptyset+\frac{1}{s}\cdot\left(\frac{-1}{s}\right)e^{-st}\Big|_0^\infty\right)\right] = \frac{10}{3}\cdot\frac{1}{s^3}(0-1)$$

10. $\int_0^\infty e^{-st}\cdot\frac{2t^4}{7}\,dt$ → $s>0$ (A)

11. $h(t)=f(t-a)u(t-a)+u(t-a) = F(s)\cdot e^{-as}+\frac{1}{s}e^{-as}$ (C)

12. $\cos(-4t) * e^{-t}\cdot\sin(-2t)$, $t\geq 0$

$$\frac{s}{s^2+w^2} = \frac{s}{s^2+16} \qquad \frac{-2}{(s+1)^2+4} \Rightarrow \frac{-2s}{(s^2+16)((s+1)^2+4)}$$

(B)

13. $\cos(3t) * e^{-t}\cdot\sin(5t)$, $t\geq 0$

$$\frac{s}{s^2+9} \qquad \frac{+5}{(s+1)^2+25} \Rightarrow \frac{+5s}{(s^2+9)((s+1)^2+25)}$$

(D)

14. $f(t) = 19 \arcsin(\sin t)\, g_{[0,\pi]}(t)$

$$\arcsin(\sin(t)) = \begin{cases} t, & t \in \left[0, \frac{\pi}{2}\right] \\ t-\pi, & t \in \left[\frac{\pi}{2}, \pi\right] \end{cases}$$

$$g_{[0,\pi]} = \left[u(t) - u\left(t-\frac{\pi}{2}\right)\right] - \left[u\left(t-\frac{\pi}{2}\right) - u(t-\pi)\right]$$

$$= u(t) - 2u\left(t-\frac{\pi}{2}\right) + u(t-\pi)$$

$$19 \arcsin(\sin(t)) \cdot u(t) - 38 \arcsin(\sin(t)) \cdot u\left(t-\frac{\pi}{2}\right) + 19 \arcsin(\sin(t)) \cdot u(t-\pi)$$

$$= 19 \cdot t \cdot u(t) - 38 \cdot \left(t-\frac{\pi}{2}\right) \cdot u\left(t-\frac{\pi}{2}\right) + 19 \cdot (t-\pi) \cdot u(t-\pi)$$

$$\Rightarrow 19 \cdot \frac{1}{s^2} - 38 \cdot \frac{1}{s^2} \cdot e^{-\frac{\pi}{2}s} + 19 \cdot \frac{1}{s^2} e^{-\pi s}$$ A

15. C

16. A

17. Laplaceov transf: $f(t) = t \sin(-8t)\, e^{-6t}$ A

$$\sin(wt) = \frac{w}{s^2+w^2} \xrightarrow{\prime} \frac{-2s \cdot w}{(s^2+w^2)^2} \Rightarrow \frac{-2(s+6)w}{((s+6)^2+w^2)^2} = \frac{16(s+6)}{((s+6)^2+64)^2}$$

18. -||- $f(t) = t \sin(-2t) e^{4t}$ $\longrightarrow \frac{-2 \cdot (-2)(s-4)}{((s-4)^2+4)^2} = \frac{4(s-4)}{((s-4)^2+4)^2}$ D

19. $F(s) = \frac{8s}{(s^2+64)(s^2+16)} + \int_s^\infty \frac{e^{6s}}{s}\, ds$

$$\frac{8}{s^2+64} \cdot \frac{s}{s^2+16} = \sin(8t) * \cos(4t) + \frac{u(t+6)}{t}$$ A

20. $F(s) = \frac{2s}{(s^2+4)(s^2+36)} + \int_s^\infty e^{-9s} \cdot \frac{1}{s}\, d$

$$\Rightarrow \sin(2t) * \cos(6t) + \frac{u(t-9)}{t}$$ A

21. Odredite original: $\frac{-s+2}{(s^2-4s+20)^2} = \frac{-s+2}{((s-2)^2+4^2)^2}$

$$\frac{-(s-2)}{((s-2)^2+4^2)^2} = \frac{-2ws}{(s^2+w^2)^2} \cdot \frac{1}{2 \cdot w} = \frac{1}{8}$$ D

22. -||- $\frac{-2s-8}{(s^2+8s+25)^2} = \frac{-2(s+4)}{((s+4)^2+3^2)^2} \cdot \frac{1}{3}$ C

$2 \cdot 4$

23. $\displaystyle\int_0^\infty \frac{t}{4} e^{-t} \cos^2(-t)\,dt = \frac{1}{8}\int_0^\infty t\, e^{-t}\left(\cos(-2t)+1\right)dt$

$s = 1$

$$F(s) = \mathcal{L}\left(\cos(-2t)+1\right) = \frac{s}{s^2+4} + \frac{1}{s}$$

$$F'(s) = -\left(\frac{s^2+4-2s^2}{(s^2+4)^2} - \frac{1}{s^2}\right) = \frac{s^2-4}{(s^2+4)^2} + \frac{1}{s^2} \overset{s=1}{=} \frac{1-4}{(1+4)^2} + 1$$

$$= \frac{-3+25}{25}\cdot\frac{1}{8} = \frac{22}{200} = \boxed{\frac{11}{100}}$$

C

24. $\displaystyle\int_0^\infty t^2 \cdot e^{-t}\cos(t)\,dt$

$$\frac{s}{s^2+w^2} = \frac{s^2+w^2-2s^2}{(s^2+w^2)^2} = \frac{w^2-s^2}{(s^2+w^2)^2}$$

$$(-t)^n f(t) \longleftrightarrow F^{(n)}(s)$$

$$\longrightarrow \frac{(w^2-s^2)'(s^2+w^2)^2 - (w^2-s^2)(s^2+w^2)^2}{(s^2+w^2)^4}$$

$$= \frac{-2s(s^2+w^2)^2 - 2(s^2+w^2)\cdot(w^2-s^2)(-2s)}{(s^2+w^2)^4}$$

C

$$= \frac{-2s(s^2+w^2) + 4s(w^2-s^2)}{(s^2+w^2)^3} \xrightarrow{s=1} \frac{-2(1+1)+\cancel{4(1-1)}}{(1+1)^3} = \boxed{\frac{-1}{2}}$$

25. $\displaystyle\int_0^\infty \frac{t}{4} e^{-2t}\cos^2(-2t)\,dt = \frac{1}{4}\int_0^\infty e^{-2t}\cdot t\cos^2(-2t)\,dt$

$$\cos^2(-2t) = \frac{\cos(-4t)+1}{2} \longrightarrow \frac{1}{8}\int_0^\infty e^{-2t}\cdot t\left(\cos(-4t)+1\right)dt$$

$s = 2$

$$\frac{s}{s^2+w^2} \longrightarrow \frac{w^2-s^2}{(s^2+w^2)^2}$$

$$\Longrightarrow \frac{16-s^2}{(s^2+16)^2} + \left(\frac{-1}{s^2}\right) = \frac{16-4}{(4+16)^2} - \frac{1}{4} = \frac{12-100}{400}$$

$$\frac{88}{400}\cdot\frac{1}{8} = \boxed{\frac{11}{400}}$$

B

Zadatak 25.) $\int_0^\infty \frac{t}{4} e^{-2t} \cdot \cos^2(-2t)\, dt$

$$e^{-2t} \cdot \frac{1}{4} \cdot t \left(\cos^2(-2t)\right) = \frac{1}{8} \cdot t \cdot \left(1+\cos(4t)\right) = \frac{1}{8} t + \underbrace{\frac{1}{8} t \cos(4t)}_{-F(s)}$$

$$\frac{1}{8} \cdot \frac{1}{s^2} + \frac{1}{8} \cdot \left(-\frac{w^2-s^2}{(s^2+w^2)^2}\right) = \frac{1}{8}\left(\frac{1}{s^2} + \frac{s^2-w^2}{(s^2+w^2)^2}\right)$$

$\alpha = 2 \longrightarrow$ uvrstimo $s = \alpha = 2$, $w = 4$ $\Rightarrow \boxed{\frac{11}{400}}$ B

Zadatak 6.) Odredite struju $J(s)$ pomoću Laplacea

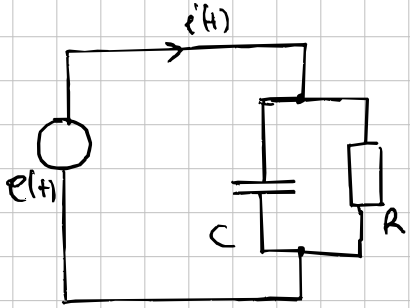

$$i(t) = \frac{e(t)}{Z} \qquad Z = \left(\frac{1}{Cs} \,\|\, R\right)$$

$$Z = \frac{R}{RCs+1} = \frac{1}{s+1}$$

$$J(s) \cdot Z = E(s)$$

$$J(s) = (s+1)\, E(s)$$

$$e(t) = \underbrace{\frac{1}{2} t \cdot g[0,2]}_{f(t)} + \overset{(t-2)}{\sqrt{u(t-2)}}$$

$e(t) \rightarrow$

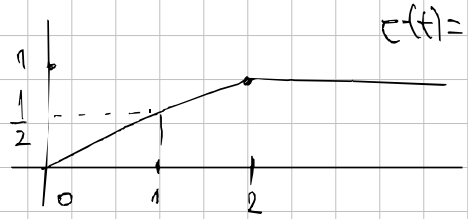

$$\frac{1}{2} t \cdot \left(u(t) - u(t-2)\right) + \overset{(t-2)}{\sqrt{u(t-2)}}$$

$$\frac{1}{2} t \cdot u(t) \mp \frac{1}{2} t\, u(t-2)$$

ali ne znam zašto bi se zamenili

$$E(s) = \frac{1}{2} \frac{1}{s^2} + \frac{1}{2} \cdot \frac{1}{s^2} \cdot e^{-2s}$$

$$J(s) = \frac{1}{2}\left[\frac{s+1}{s^2} + \frac{s+1}{s^2} \cdot e^{-2s}\right] = \frac{1}{2}\left[\frac{1}{s} + \frac{1}{s^2} \mp \frac{1}{s} e^{-2s} \pm \frac{1}{s^2} \cdot e^{-2s}\right]$$

$$i(t) = \frac{1}{2}\left[1 + t + u(t-2) + t\, u(t-2)\right]$$

Zadat až 27.)

RIJEŠI OPET OVE!

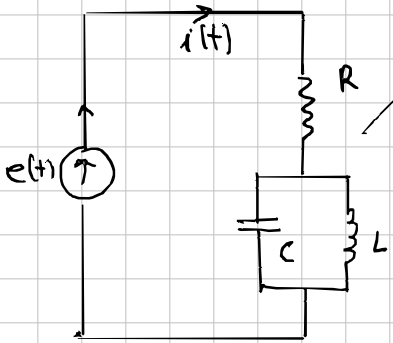

$$Z = R + \left(\frac{\frac{1}{Cs} \cdot SL}{\frac{1}{SC} + SL} \right) = R + \frac{SL}{1 + s^2 CL}$$

$$Z = 3 + \frac{2s}{1 + 2s^2} = \frac{3 + 6s^2 + 2s}{1 + s^2}$$

$$e(t) = t \cdot u(t) = \frac{1}{s^2}$$

$$J(s) = \frac{E(s)}{Z} = \frac{1}{s^2} \cdot \frac{s^2 + 1}{3 + 6s^2 + 2s} = \frac{1}{s^2} \cdot \frac{s^2 + 1}{6s^2 + 2s + 3}$$

$$= \frac{1}{6s^2 + 2s + 3} + \frac{1}{s^2} \cdot \frac{1}{6s^2 + 2s + 3} \qquad \frac{1}{6} \cdot \frac{1}{s^2 + \frac{1}{3}s + \frac{1}{2}}$$

$$s^2 + \frac{1}{6} \cdot 2s + \frac{1}{36} + \frac{17}{36}$$

C

28.

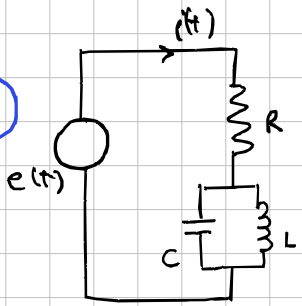

$$Z = 1 + \frac{3s}{1 + s^2 \cdot 9} = \frac{1 + s^2 \cdot 9 + 3s}{1 + s^2 9} = \frac{9s^2 + 3s + 1}{9s^2 + 1}$$

$$e(t) = \frac{6}{7} + u(t) \Rightarrow \frac{6}{7} \cdot \frac{1}{s^2}$$

$$J(s) = \frac{E(s)}{Z} = \frac{6}{7} \cdot \frac{1}{s^2} \cdot \frac{9s^2 + 1}{9s^2 + 3s + 1} = \frac{6}{7} \cdot \frac{1}{s^2} \left[1 - \frac{3s}{9s^2 + 3s + 1} \right]$$

$$\frac{6}{7} \cdot \frac{1}{s^2} \left[1 - \frac{s}{3s^2 + s + \frac{1}{3}} \right] = \frac{6}{7} \cdot \frac{1}{s^2} \left[1 - \frac{1}{3} \cdot \frac{s}{s^2 + \frac{1}{3}s + \frac{1}{9}} \right]$$

$$\frac{1}{6} \cdot 2 \cdot s \qquad \frac{1}{6} - \frac{1}{18}$$

$$\frac{6}{7} \cdot \frac{1}{s^2} \left[1 - \frac{1}{3} \cdot \frac{s}{\left(s + \frac{1}{6}\right)^2 + \frac{1}{6}} \right]$$

D

30

$x(0) = 2 \quad , y(0) = -2$

$$\left.\begin{aligned} sX(s) - X(0) &= 9X(s) + 8Y(s) \\ sY(s) - Y(0) &= 9Y(s) \end{aligned}\right\} \quad \begin{aligned} X(s)(s-9) &= 8Y(s) + 2 \\ Y(s)(s-9) &= -2 \end{aligned}$$

$$X(s) = \frac{1}{s-9}\left(8Y(s)+2\right) = \frac{1}{s-9}\left(8 \cdot \frac{-2}{s-9} + 2\right) = \frac{-16}{(s-9)^2} + \frac{2}{s-9}$$

$$-16 \cdot t \cdot e^{9t} \qquad + \qquad 2 \cdot e^{9t}$$

$x(t) = 2e^{9t} - 16te^{9t}$ B

31.

$sX(s) - X(0) = 2X(s) - 9Y(s) \qquad x(0) = 9 \quad , y(0) = -1$

$sY(s) - Y(0) = 2Y(s)$

$X(s)(s-2) = -9Y(s) + 9 \longrightarrow X(s) = \frac{1}{s-2} \cdot \left(\frac{9}{s-2} + 9\right)$

$Y(s)(s-2) = -1 \longrightarrow Y(s) = \frac{-1}{s-2}$

$9t \cdot e^{2t} + 9e^{2t}$ C